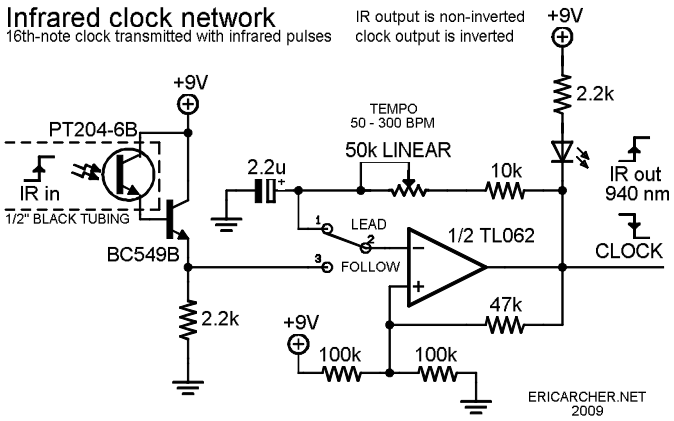
Infrared clock network
16th-note clock transmitted with infrared pulses
IR output is non-inverted
clock output is inverted
+9V
2.2k
IR out
940 nm
CLOCK
TEMPO
50 - 300 BPM
50k LINEAR
10k
2.2u
LEAD
FOLLOW
1/2 TL062
47k
100k
100k
+9V
PT204-6B
IR in
1/2" BLACK TUBING
BC549B
2.2k
+9V
ERICARCHER.NET
2009